beyond
APPLIANCES

USER MANUAL

Lume

Please read the user's manual carefully

TABLE OF CONTENT

Introduction 3
Safety Precaution 3
Machine Overview 4
Product Dimension 4
Do's and Don'ts 5
Installation Instructions 5
Operating Instructions 6
Button Control 7-8
GESTURE Control 9-10
Carbon Filter 11
Auto Clean 12
Environment Protection 13
Maintenance 14
TroubleShooting 14
Wiring Diagram 15

Product Video

Thank you for choosing our chimney.

• This instruction manual is designed to provide you with all required instructions related to the installation, use and maintenance of the appliance.
• In order to operate the unit correctly and safely, please read this instruction manual carefully before installation and usage.
• The chimney uses high quality materials, and is made with a streamlined design. Equipped with large power electric motor and centrifugal fan, it also provides strong suction power, low noise operation, non-stick grease filter and easy assembly installation.

SAFETY PRECAUTION

• Never let the children operate the machine.
• The chimney is for home use only, not suitable for barbecue, roast shop and other commercial purpose.
• The chimney and its filter should be clean regularly in order to keep in good working condition.
• Clean the chimney according to the instruction manual and keep the unit from danger of burning. There is a fire risk if cleaning is not carried out in accordance with the instructions.
• Forbid the direct baking from the gas cooker.
• Please keep the kitchen room a good condition.
•Before connecting this appliance check that the power supply cord is not damaged. A damage supply cord must be replaced by qualified service personnel only.
• There shall be adequate ventilation of the room when the range hood is used at the same time as appliances burning gas or other fuels;
• The air must not be discharged into a flue that is used for exhausting fumes from appliances burning gas or other fuels;
• Regulations concerning the discharge of air have to be fulfilled.
• This appliance if not intended for use by persons (including children) with reduced physical, sensory or mental capabilities, or lack of experience and knowledge, unless they have been given supervision or instruction concerning use of the appliance by a person slide for their safety.
• Children should be supervised to ensure that they do not play with the appliance.
• Do not flambés under the range hood.
• CAUTION: Accessible parts may become hot when used with cooking appliance.

Electrical Shock Hazard

• Only plug this unit into a properly earthed outlet. If in doubt seek advice from a suitably qualified engineer. • Failure to follow these instructions can result in death, fire, or electrical shock.

MACHINE OVERVIEW

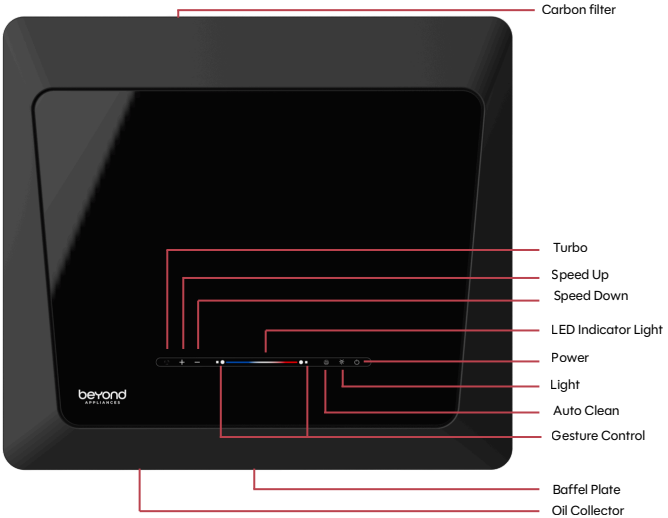

PRODUCT DIMENSIONS

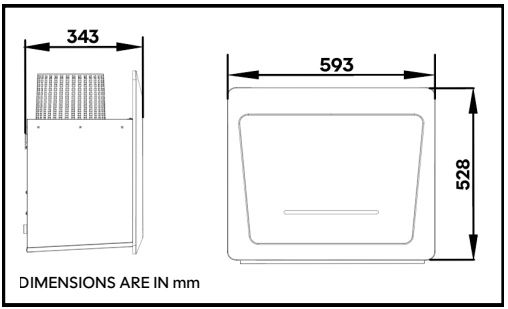

Dont's

1. Do not lift the chimney by holding the Glass.
2. Be cautious while handling the chimney, any impact on the chimney by hard surface will lead to scratches or breakage of glass.
3. Before letting the chimney to hang ensure both the hooks are engaged to the slot of the chimney.
4. Ensure there is no leakage of air around the joints and anywhere on the carbon filter.
5. Ensure the carbon filter was fitted properly and there are no leaks around the filter duct.

Do's

1. Install the chimney as per the installation guideline document.
2. Install the oil tray back onto the chimney after cleaning.
3. Use auto clean regularly.

INSTALLATION INSTRUCTIONS

Choose the type of drill bit according to the material of the wall. (All dimensions mentioned below are in millimetre)

1. PREPARE FOR INSTALLATION:

- Carefully unpack the chimney and check for any visible damage during transit.
- Verify that all components are included: chimney body, wall brackets, screws, and user manual.
- The carbon filters are pre-installed from the factory — no additional setup is required.
- Choose a wall that is flat, vertical, and capable of supporting the chimney's weight.
- Before installation, turn the unit off and unplug it from the outlet.



2 INSTALLATION

• Attention! Observe the warning in the instruction sheet concerning the operation of "appliance when air is discharged from the room.
• When the range hood and appliance supplied with energy other than electricity are simultaneously in operation, the negative pressure in the room must not exceed 4 Pa (4×10-5 Bar)
• Drill 4 x 8mm holes to accommodate the bracket. Screw and tighten the bracket onto the wall with the screws & screw plugs provided.

• Lift up the chimney and hang onto the wall bracket hook.

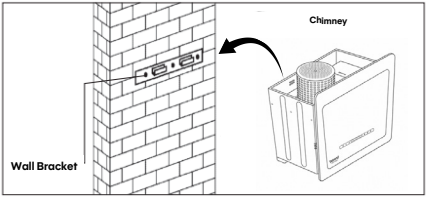

OPERATING INSTRUCTIONS

Control Interface



Button Controls

Power

1. With the unit off, briefly press the Power button to turn it on; all indicator lights turn on.
2. With the unit on, briefly press the Power button to turn it off; all indicator lights turn off (the power button remains dimly lit).
3. If the fan is running and you briefly press the Power button, the unit will enter a 60-second delayed shutdown; the corresponding button light flashes

Auto Clean

1. With the unit on, press and hold the Cleaning button for 3 seconds to activate the cleaning function. It runs for 10 minutes, with the corresponding button light flashing. When the time is up, the range hood turns off automatically.
2. To cancel cleaning before the time is up, press and hold the same button again for 3 seconds.

Light

1. With power connected, briefly press the Light button to turn on the light; the corresponding button light flashes.
2. Press the same button briefly again to turn off the light.

Turbo

1. With the unit on, briefly press the turbo button to activate the boost fan speed; the corresponding button light flashes. After 1 minute of operation, it automatically switches to speed level 8.
2. Press the same button briefly again to turn off the fan.

Speed Up +

With the unit on, briefly press the Speed Up button:
1st press: sets fan speed to level 1, corresponding button light flashes.
2nd press: speed level 2.
3rd press: speed level 3.
4th press: speed level 4.
5th press: speed level 5.
6th press: speed level 6.
7th press: speed level 7.
8th press: speed level 8.
Once level 8 is reached, further presses have no effect

Speed Down −

With the unit on, briefly press the Speed Down button: ·
1st press: sets fan speed to level 8, corresponding button light flashes.
2nd press: speed level 7.
3rd press: speed level 6.
4th press: speed level 5.
5th press: speed level 4.
6th press: speed level 3.
7th press: speed level 2.
8th press: speed level 1.

GESTURE CONTROL



Led turn on & Speed 1



Speed 2



Speed 3



Speed 4



Speed 5



Speed 6



Speed 7



Speed 8

Gesture Controls

1. **With power connected, swipe your hand from left to right**

- Swipe 1 - Turns on fan speed level 1 and the light
- Swipe 2 - Speed level 2
- Swipe 3 - Speed level 3
- Swipe 4 - Speed level 4
- Swipe 5 - Speed level 5
- Swipe 6 - Speed level 6
- Swipe 7 - Speed level 7
- Swipe 8 - Speed level 8

2. **When the fan is running, swipe from right to left**

- Swipe 1 - Enters a 1-minute delayed shutdown.
- Swipe 2 - Shuts down immediately

3. **When the fan is not running, swipe from right to left: shuts down immediately**

Ductless Carbon Filter Technology

This chimney is equipped with a ductless system that uses activated carbon filter technology to purify air before recirculating it back into the kitchen. The filtration process involves two main stages: a grease filter that traps oil and particles, followed by a carbon filter made of porous activated carbon, which absorbs odors, smoke, and volatile organic compounds (VOCs).

The activated carbon offers high surface area (typically 500–1500 m^2/g), allowing it to remove up to 85–95% of odors and fumes under optimal airflow. This also helps reduce overall noise by eliminating the need for external ducting, maintaining quieter operation around 50–55dB.



Carbon filters are non-washable and should be replaced depending on usage. A drop in performance or increased motor noise may signal the need for replacement. The filter is user-replaceable, making maintenance simple and efficient.

Auto-Clean

A unique "Auto-Clean" function has been provided in this chimney to ensure effortless and effective internal cleaning. This chimney comes equipped with oil collector tray. As you cook, the chimney continuously sucks in airborne particles, including excess oil and smoke. However, over time, some traces of stubborn grease and sticky oil can settle inside the chimney's internal surfaces, especially in areas that are not easily accessible for manual cleaning.

To tackle this issue, the chimney is designed with a unique and advanced Auto-Clean feature. This new-generation function is powered by an internal heating element that has been securely fixed within the structure. This heating element works to loosen and melt down the hardened grease, making it easier to remove.

To activate the Auto-Clean function, first ensure that the chimney is in standby mode (i.e., turned on but not running). Then, long press the function button for 3 seconds. This action will produce the corresponding button light to flash, which confirms that the cleaning process has been initiated. When the time is up, the range hood turns off automatically. To cancel cleaning before the time is up, press and hold the same button again for 3 seconds



LED Indicating Auto Clean Function Turned on

During the first 8 minutes, the heating element heats up the interior surfaces of the hood to a high temperature. This heat effectively breaks down the thick layers of grease and oil stuck inside. Once the heating cycle is completed, the fan will automatically start operating. The fan will run for the next 2 minutes helping to expel the vaporized grease particles through the air outlet. Any remaining melted grease is directed and drained into the oil collector tray, which is conveniently located at the back of the filter.

The entire Auto-Clean process takes approximately 10 minutes. Once the cycle is complete, the function will automatically stop. Allow the chimney to cool for a short while. After that, carefully remove the oil collector tray, making sure to handle it gently to avoid spilling any of the collected grease. Drain the contents into a sink or suitable container, and then clean the tray thoroughly using a soft cloth or sponge. Make sure it is dry and clean before reinstalling it.

To fix the oil collector tray back in place, slide it into the guide rails located on both ends and ensure it fits securely and snugly. This will prevent any accidental spills.

Once done, your chimney will be clean from the inside, refreshed, and ready to use again—almost as good as new. Regular use of the Auto-Clean function helps maintain the chimney's suction efficiency and prolongs its lifespan.

ENVIRONMENTAL PROTECTION

Waste electrical products should not be disposed of with household waste. Please recycle where facilities exist. Check with your Local Authority or retailer for recycling advice.

This appliance is marked according to the European directive 2002/96/EC on Waste Electrical and Electronic Equipment (WEEE).

By ensuring this product is disposed of correctly, you will help prevent potential negative consequences for the environment and human health, which could otherwise be caused by inappropriate waste handling of the product.

The symbol on the product indicates that this product may not be treated as household waste. Instead, it shall be handed over to the applicable collection point for the recycling of electrical and electronic equipment.

Disposal must be carried out in accordance with local environmental regulations for waste disposal.

For more detailed information about the treatment, recovery, and recycling of this product, please contact your local city office, your household waste disposal service, or the shop where you purchased the product.

MAINTENANCE INSTRUCTIONS

Before cleaning switch the unit off and pull out the plug.

1. Regular Cleaning:

- Before cleaning, ensure the unit is switched off and unplugged.
- Use a soft cloth dampened with warm, mildly soapy water or a gentle household detergent. Avoid using metal pads, harsh chemicals, abrasive materials, or stiff brushes to prevent damage.

2. Monthly Cleaning for Baffle Filter:

IMPORTANT: Clean the baffle filter every month to prevent fire hazards.

- The baffle filter traps grease, smoke, and dust, which directly impact the chimney's efficiency.
- If left uncleaned, grease buildup can become a fire risk. Clean the baffle filter using a mild household detergent for optimal performance.

TROBULESHOOTING

Issue	Solution
Touch not responding	If chimney functions are unable to use 1. Check the power supply 2. Restart the chimney 3. Call customer care
LED Light not turning on	1. Check if power supply is on 2. Check if the blower working 3. Call Customer care

WIRING DIAGRAM

beyond APPLIANCES

LUBLPP

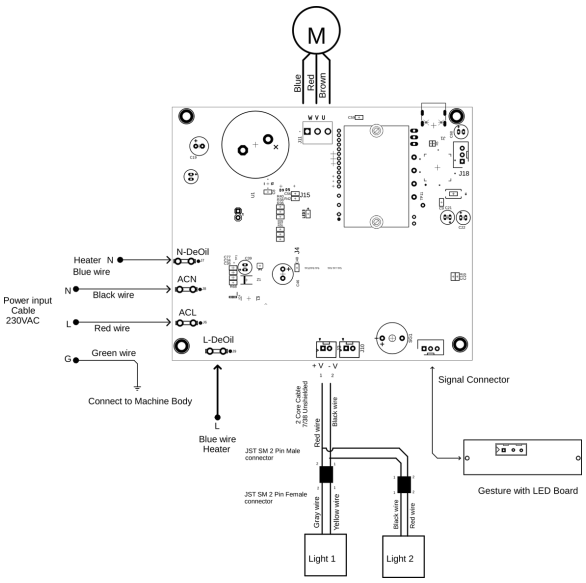

beyond
APPLIANCES

For Service and Installation:
Call us at 08043628277 or
WhatsApp us at +91 8105208433.
BYONDNXT SMART HOME PVT LTD
545/15, survey 13, 15, Hosur Rd, Bommanahalli,
Bengaluru, Karnataka 560068
+91 97314 14858 / www.beyondappliances.in